Proceedings in MANUFACTURING SYSTEMS

Proceedings in Manufacturing Systems, Volume 20, Issue 1, 2025, pp. 3-8 ISSN 2067-9238

USE OF REVERSE ENGINEERING PRINCIPLES TO DESIGN A TWIST DRILL SHARPENING DEVICE

Alexandra-Anamaria SPIRIDON[1], Adriana MUNTEANU[2], Rica BÂZDÂGĂ[3,*], Bruno RĂDULESCU[4], Marius Andrei MIHALACHE[5], Laurențiu SLĂTINEANU[6]

[1)] Eng., Department of Digital Production Systems, "Gheorghe Asachi" Technical University of Iași, România
[2)] Assoc. Prof., PhD, Department of Digital Production Systems, "Gheorghe Asachi" Technical University of Iași, România
[3)] Eng., Department of Machine Manufacturing Technology, "Gheorghe Asachi" Technical University of Iași, România
[4)] Lecturer, PhD, Department of Digital Production Systems, "Gheorghe Asachi" Technical University of Iași, România
[5)] Assoc. Prof., PhD, Department of Machine Manufacturing Technology, "Gheorghe Asachi" Technical University of Iași, România
[6)] Prof., PhD, Department of Machine Manufacturing Technology, "Gheorghe Asachi" Technical University of Iași, România

Abstract: *The sharpening of twist drills is an important issue for ensuring optimal performance in the exploitation of these categories of tools. The study of the specialized literature highlighted the existence of distinct methods and equipment currently used for sharpening twist drills. It was found that by using principles of the reverse engineering method it is possible to identify innovative solutions that would ensure the necessary conditions for the correct sharpening of the twist drills in small mechanical workshops, which do not have specialized sharpening machines. A solution for a sharpening device was proposed, based on obtaining a cylindrical shape of the drill tooth flank. The possibility of using the device on a universal lathe was considered. The manufacturing of the device and the performance of preliminary experimental tests confirmed the possibilities of using the proposed device for sharpening twist drills.*

Key words: *twist drill, sharpening, reverse engineering, cylindrical surface, adaptable device on universal lathe.*

1. INTRODUCTION

In machine manufacturing, holes can be realized by several methods, such as drilling using cutting tools, or by electrical discharge machining, electrochemical machining, plasma machining, ultrasonic machining, or water jet machining. The most common method is to drill using cutting tools, specifically using drills. This method usually involves a rotational movement of the tools (the main movement) and a translational movement (the feed of the drill along its axis). Drills are tools designated for manufacturing holes in solid material; they have cutting edges that allow a gradual removal of material from the workpiece and the generating of the hole. In general, drilling using a drill is considered a roughing operation. In the machine manufacturing industry drills can be classified according to their construction and purpose; there are twist drills, straight flute drills, single-edged drills, and special drills, all of which are equipped with straight channels or helical channels for chip removal.

The output parameters monitored in the case of drilling processes include the accuracy of hole generation, productivity, surface roughness, moments and forces developed during the process, the temperature generated, and the degree of the drill wear. In addition to these parameters, in some cases, the shape and method of chip evacuation are taken into account. All these indicators are essential in obtaining holes following technological requirements. However, several factors influence the values of the parameters of technological interest. Such factors are those that refer to the intensity of the cutting process (cutting depth, feed, cutting speed), the lubrication conditions, the machinability of the workpiece material (evaluated, for example, by its hardness, tensile strength, the energy required to remove a certain amount of workpiece material), to the rigidity of the technological system, to the condition of the drill cutting edges, to the phenomenon of vibrations, etc.

Through the sharpening process of the twist drills, the cutting edges and characteristic angles are generated, while through the resharpening process, it is necessary to bring the active area of the tool as close as possible to the initial conditions or to the values considered optimal in terms of the efficiency of the drilling process. Sharpening and resharpening are carried out by controlled abrasive machining of the drill bit surfaces, at the level of its active area, to ensure values appreciated as optimal for the cutting conditions. Done correctly, resharpening can help reduce drilling force, improves the accuracy and roughness of the machined surface, and extends the life of the drill bit. To achieve the recommended drill bit tip geometry, manual sharpening and mechanized sharpening can be used respectively.

Manual sharpening is typically conducted using grinding machines and necessitates the involvement of highly skilled personnel. The effectiveness of this

[*] Corresponding author: Blvd. D. Mangeron, 59A, 700050 Iași, România,
Tel.: +40 787 690 283;
E-mail addresses: *rica.georgiana.bazdaga@student.tuiasi.ro* (R.G. Bazdaga)

process relies heavily on the operator's professional expertise, as their ability to control the sharpening parameters directly impacts the dimensional accuracy of the drill tip. Experienced operators are capable of achieving geometrical values that approximate the optimal specifications required for efficient cutting performance. The precision obtained during manual sharpening is critical, as it significantly influences the operational quality, durability, and performance consistency of the drill. Furthermore, the operator must ensure the preservation of the correct cutting angles and surface characteristics throughout repeated sharpening cycles.

In contrast, *mechanized sharpening* is achieved through the utilization of specialized equipment, including dedicated tool sharpening machines and adaptable devices that can be integrated with conventional grinding machines. Mechanized systems are predominantly employed in industrial environments where high tool turnover necessitates enhanced consistency and efficiency. These systems offer considerable advantages over manual methods by providing superior repeatability, minimizing operator-induced variability, and maintaining strict fulfillment of the desired geometrical tolerances. Advanced mechanized sharpeners often incorporate automated control systems and programmable settings, which facilitate the precise reproduction of complex tool geometries and contribute to the optimization of the sharpening process. Consequently, mechanized sharpening not only improves the quality of the cutting edges but also extends the service life of the tools while reducing downtime associated with manual reconditioning.

Over the past few decades, researchers have been looking at ways in which an optimization of drill tip geometry becomes possible. Thus, in some studies, it was considered how the different types of drill bit sharpening affect the size of the axial force and the torque during drilling. It was observed that the type of sharpening significantly influences the values of axial force and torque, thus affecting the efficiency of the drilling process. [1]. Another study proposed an analytical model for characterizing the twist drill tip, in which the cutting edges were elliptical [2]. It has been found that concerning drills with cutting edges in the form of arcs, such geometry ensures that advantages are obtained by reducing the energy consumption required for the cutting process.

Among the Romanian researchers who have approached problems related to the sharpening of twist drills, it is worth mentioning, first of all, Professor Vitalie Belousov, whose doctoral thesis, defended in 1966, proposed new procedures for sharpening drill bits [3]. A helical drill sharpening machine designed by Professor Belousov was to be mass-produced at an industrial company in Suceava.

Research on the sharpening of twist drills has also been promoted at the University of Galați. In this regard, it is worth mentioning the works elaborated by Professor Nicolae Oancea, in the last decades of the previous century [4–6]. Cătălin Fetecău contributed to the publication of works on cutting tools such as drills and therefore also on the sharpening of such tools [7–8]. Also, at the University of Galati, Nicușor Baroiu conducted research on the cutting behavior of helical drills [9].

Reverse engineering is a systematic process of analyzing an existing product to understand its functional mechanisms, structural design, and manufacturing methodology, particularly when original design documentation is unavailable. This approach enables engineers to decompose a product and recreate its design intent, facilitating product redevelopment, enhancement, and innovation. Reverse engineering serves strategic purposes across industries, including redesigning obsolete components, improving performance, and adapting products to new technologies or standards. Research has shown that reverse engineering is a critical tool for optimizing manufacturing processes, reducing production costs, minimizing material waste, and shortening development cycles. It also plays a pivotal role in competitive benchmarking by allowing organizations to incorporate advantageous features from market-leading products.

The emergence and integration of advanced technologies, particularly three-dimensional (3D) scanning and computer-aided design (CAD) modeling, have significantly enhanced the efficacy of reverse engineering. 3D scanning enables rapid, precise acquisition of complex geometries, generating detailed digital models. CAD modeling facilitates the reconstruction, modification, and simulation of these geometries, accelerating design iterations and improving quality. Together, 3D scanning and CAD have reduced manual effort and increased the reliability and reproducibility of digital models, establishing reverse engineering as indispensable in modern manufacturing [10].

The objective pursued in the research underlying this paper was to identify innovative solutions for a helical drill sharpener, including by using principles from the reverse engineering method. In this regard, an analysis of some of the known sharpening processes and equipment was first carried out. Subsequently, a variant of an adaptable drill sharpener on a universal lathe was proposed.

2. SHARPENING TWIST DRILLS

In the last part of the helical drill manufacturing process, a sharpening operation is included. Such an operation, in this case, called *resharpening*, also applies when, due to use, the cutting edges of the drill bit are affected by wear. Changing the geometry of the drill tip concerning the initial geometry, considered optimal, results in a decrease in the accuracy of the generated surface, a worsening of the roughness, an overheating of the drill tip, and the formation of larger burrs on the surfaces that delimit the drilled hole. In principle, the resharpening process consists of restoring the cutting edges and the optimal value angles by removing a thin layer of material from the drill tip. The process must ensure that the symmetry conditions of the drill edges are maintained, to ensure that holes are drilled following the requirements of the execution documents of a part.

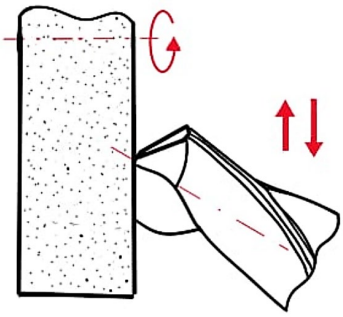

Fig. 1. Drill sharpening.

A general schematic representation corresponding to the drill bit sharpening process can be seen in Fig. 1. The grinding wheel performs a rotational movement, while the drill bit is placed in an inclined position and performs, in the simplest version, a rectilinear-alternating movement along a direction perpendicular to the axis of rotation of the grinding wheel. Other sharpening variants also consider a rotation of the drill bit around its axis.

Some of the more well-known drill sharpening processes are the following [11, 12]:

1. *The flat sharpening method*, for which the processing scheme in Fig. 1 is valid, provides conditions for the realization of a flat shape of the main laying surfaces, the resulting cutting edge corresponding to a straight line. Such a shape provides high cutting-edge strength but can generate higher axial forces during cutting. At the same time, following the application of this process, the mass of the cutting tooth decreases in the area of the tip of the tool, which can lead to a decrease in the heat evacuation capacity and therefore to lower durability;

2. *The Bancroft - Washborne-Stock conical sharpening method* (Fig. 2, *a*) leads to a conical shape of the flank surface. Due to the variation in the curvature of the cone towards the tip of the drill, the value of the flank angle along the main edge of the drill bit changes, decreasing from the level of the outer diameter to the axis of the tool. The process provides better conditions for the drill bit to penetrate the workpiece material and results in a reduction in cutting effort;

3. *The cylindrical Blau sharpening method* (Fig. 2, *b*) is similar to the conical process, but there is an oscillatory movement of the drill bit around an axis parallel to the front plane of the grinding wheel. A straight front cylinder surface is thus created;

4. *The Weiseker conical sharpening method* (Fig. 2, *c*) is characterized by a right angle between the axis of the imaginary cone and the axis of the drill. The value of the flank angle along the main edge decreases, the process becoming disadvantageous from the point of view of the drill bit operation;

5. *The cylinder-elliptical sharpening method* (Fig. 2, *d*) provides conditions for the formation of a flank surface as an area of a cylinder with a normal elliptical cross-section or of two intersecting elliptical cylinders. The active surface of the abrasive body is hyperboloidal in shape. There is an increase in tooth mass, which could ensure the greater service life of the drill;

6. *The helical sharpening methods* (Fig. 2, *e*, *f*, and *g*) lead to the flanks in the form of helical surfaces.

The main output parameters of the twist drill sharpening process are:

- Ensuring a certain precision regarding the symmetry of the drill edges;
- Geometry of the active area of the drill;
- Roughness of surfaces realized by sharpening;
- Cutting force values;
- The temperature at the tip of the drill.

These parameters can be influenced by several input factors or groups of factors, such as:

- *Technological factors:*
  - Type of sharpening;
  - The nature and properties of the abrasive body material used for sharpening;
  - Values of the sharpening parameters;
  - Way of cooling the drill during the sharpening;
- *Factors related to the design and material of the drill bit*:
  - The nature and properties of the drill material;
  - The values of the parameters that define the active

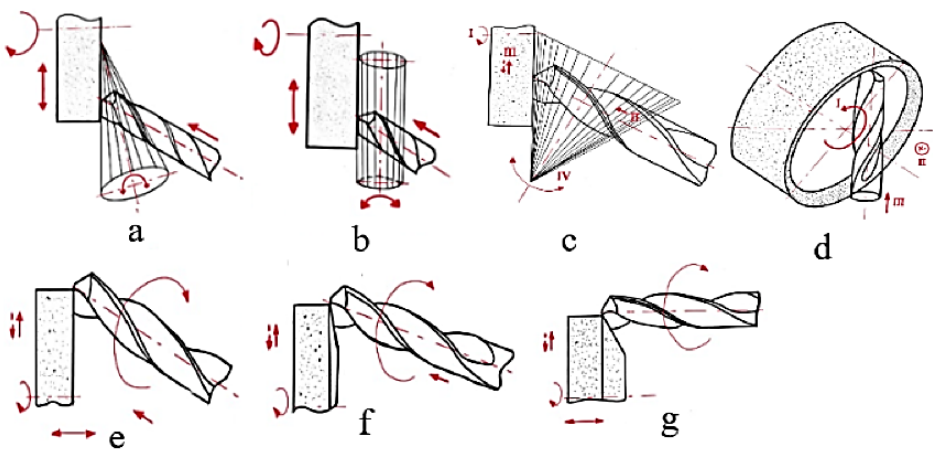

Fig. 2. Sharpening methods: a – the Bancroft-Washborne-Stock conical sharpening; b – the cylindrical Blau sharpening; c – the Weiseker conical sharpening method; d – the cylinder-elliptical sharpening method; e, f, g – the helical sharpening (adapted from [11]).

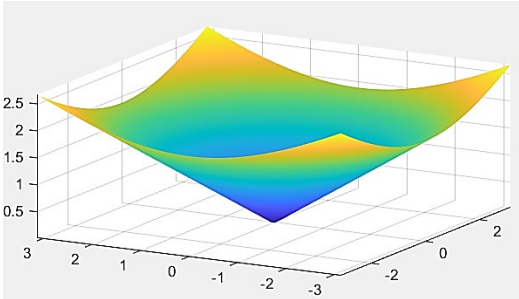

Fig. 3. The conical surface that includes the main cutting edges of the drill (graphic representation made using the Matlab software).

area of the drill;
- Drill dimensions;
- The recommended shape of the flank;

- *Factors that take into account the condition of the active area of the drill:*
  - Some material properties of the active area of the drill;
  - The wear of the drill.

In twist drill geometry, both cutting edges and tooth flank surfaces can be described in the form of mathematical relationships using conical surfaces. For their description, the equations of rotation cones with the axis of symmetry along the axis of the drill are used. In a Cartesian coordinate system, this axis can be the *Z*.

In the case of the main cutting edges, the conical surface on which they are located (Fig. 3) is defined by the angle at the tip 2α of the drill, resulting in the equation [12]:

$$x^2 + y^2 = (z \tan \alpha)^2, \quad (1)$$

where α is half the value of the angle of the tip of the drill; x, y, z are the coordinates of the points on the conical surface.

Equation (1) defines the geometry of the main cutting edges and influences how the drill carries out the process of removing a quantity of the workpiece material.

The flank of each cutting tooth (Fig. 4) of the drill bit can also be considered a conical surface, dependent, to a certain extent, on the size of the clearance angle γ.

The equation of this surface is similar [12] to that of Eq. (1):

$$x^2 + y^2 = (z \tan \gamma)^2, \quad (2)$$

where γ is the size of the clearance angle (usually with values between 8 and 15 °).

The area defined by equation (2) has an influence on the efficiency of the chip evacuation process and on the size of the frictional force between the drill bit and the workpiece material. Through these equations, the influence of the drill geometry on some of its operating performance can be observed.

3. REVERSE ENGINEERING METHOD

The reverse engineering method belongs to the group of experimental and analytical research methods. As mentioned before, the method involves analyzing an existing product, in order to understand its structure and

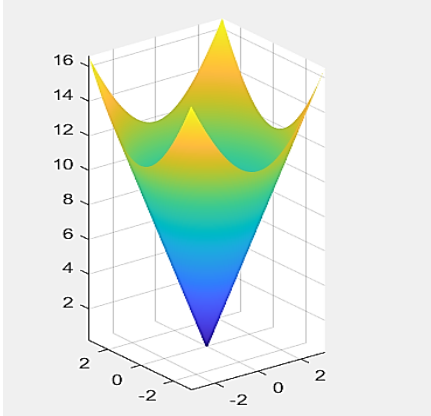

Fig. 4. The conical surface corresponding to the tooth flank surface of a twist drill (graphic representation made using the Matlab software).

operating principles, to be able to reproduce or even optimize the accessed solution. Such a method has been used so far in many fields. For example, Audi and Porsche used an analysis of the Tesla Model 3 car to improve the aerodynamic profile of the cars they manufactured [13, 14]. The analysis of the Stuxnet cyber virus by antivirus software manufacturers has made it possible to identify solutions to protect against the effects generated by the said virus [15, 16]. A museum in the United Kingdom used principles from reverse analysis to provide solutions for manufacturing tank tracks, based on detailed knowledge of such products [17].

The use of the reverse engineering method has seen a significant increase in the last decade, with the improvement of 3D scanning and computer-aided modeling (CAD) technologies. If at the beginning this process was used only for the analysis and reproduction of existing parts, with technological progress there were improvements in the method. The use of scanning, 3D printing, and advanced software allowed the rapid generation of prototypes and parts characterized by complex geometries.

Using the reverse engineering method involves going through several steps. Thus, in the case of physical products, the first step is the collection of data, with the precise measurement of the dimensions of the parts or their 3D scanning, being necessary to understand the functioning of the analyzed product. After proper processing of the available data, a CAD model is made. The model will be used to improve the design or to generate parts with characteristics superior to those of the original part. In the last stage, rapid prototyping is carried out and the results are analyzed, before moving on to the final manufacture of the parts.

4. ANALYSIS OF EQUIPMENT AND DEVICES USABLE FOR SHARPENING TWIST DRILLS

A brief analysis of the equipment and devices currently used for sharpening twist drills revealed that there are:

- *Universal sharpening machines,* which allow the sharpening of drills with various geometries and sizes. Such sharpening machines allow the necessary adjustments to achieve certain values of the functional angles of the drill bits. Usually, it is

possible to generate flat and tapered flank surfaces for the drill bits, depending on the way the drill bit is positioned concerning the abrasive disc and the kinematics specific to the sharpening process;

- *Sharpening devices that are adaptable to other machines* and which can be used in small workshops. These devices have a simple and economical solution, but, as a rule, they do not allow a change in the value of the flank angle, so the geometry that can be obtained is quite limited, and the sharpening accuracy is not high. Another disadvantage refers to the correction of the abrasive body, which usually cannot be done on such devices;
- *Sharpening machines equipped with CNC subsystems* offer high precision, even having the possibility of automating some drill bit sharpening sequences. On these machines, flank surfaces of different shapes can be made, depending on the machine's work programme. The main disadvantage of these machines is the very high cost of purchase and maintenance.

5. PROPOSED SOLUTION FOR A TWIST DRILL SHARPENING DEVICE

To identify an affordable solution for sharpening twist drills in small workshops, there were considered requirements such as:

- the possibility of changing the value of the flank angle;
- compatibility with drills with different diameters;
- low cost of implementation;
- ease of use.

The machining scheme taken into account involves the use of the inner cylindrical surface of an abrasive body (Fig. 5). An arrangement of the drill bit in a position inclined to the axis of an inner cylindrical surface of the grinding body with which it is in contact and a displacement of the drill bit along the axis of the inner cylindrical surface would provide conditions for the generation of a flank forming part of a cylindrical surface.

To ensure the movements necessary for the sharpening process, it started with the hypothesis of the possibility of using a universal lathe, meaning the use of a machine tool that is commonly found in small mechanical workshops.

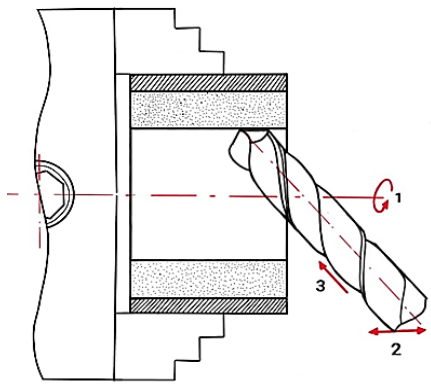

Fig. 5. Sharpening scheme taken into account.

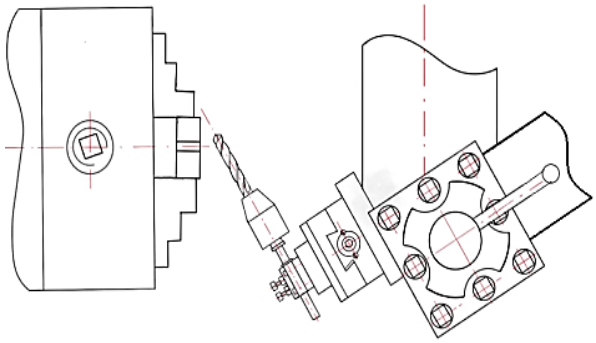

Fig. 6. Top view of the proposed device for sharpening twist drills.

The proposed version was that of a device based on the locating and clamping the twist drill bit in a chuck whose shaft can be rotated and fixed in a certain position and which is mounted on a disc-type part, which can be rotated around a horizontal axis (Fig. 6 and Fig. 7). The disc is attached to a sled that can be moved in a vertical direction. The immobilization of the disc-type part on the sled takes place with the help of screws that are in some clearances in the form of circle arcs located on the disc-type part, the circle arcs having a common axis with that of the step of a pin used to rotate the disc-type part. The movement of the sled takes place on a guide provided with a parallelepiped part that allows the device to be clamped in one of the 4 slots of a tool holder of the universal lathe.

The abrasive body is represented by a cup body whose bottom has been removed. The resulting abrasive tool was clamped into the universal chuck of the lathe. To avoid direct contact of the metal shaft with the grinding wheel, the latter was located and clamped using an elastic bracelet made by sectioning a plastic bushing.

Different values of the angle constituted by the two edges of the drill can be obtained by rotating and clamping the slide guide that supports the drill holder.

By taking into account the aforementioned aspects, a first version of the device was practically made (Fig. 8). Preliminary tests have proven the possibilities of using the device. As *limitations* of the use of the device, it can mention those regarding the more difficult correction of the cylindrical working surface of the abrasive body, but also the need to manually perform the moving movement of the drill in contact with the surface of the abrasive body. Next, it is intended to carry out experimental research that will allow the establishment of values of the device adjustment parameters, so as to obtain values of the flank angle in accordance with the existing recommendations in this regard in the literature.

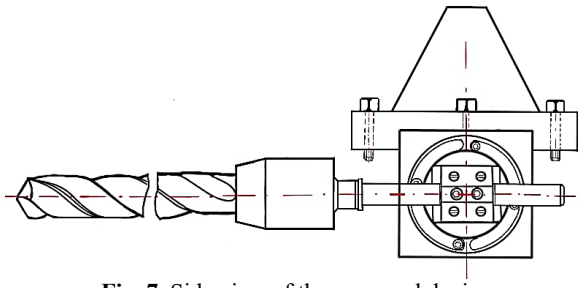

Fig. 7. Side view of the proposed device for sharpening twist drills.

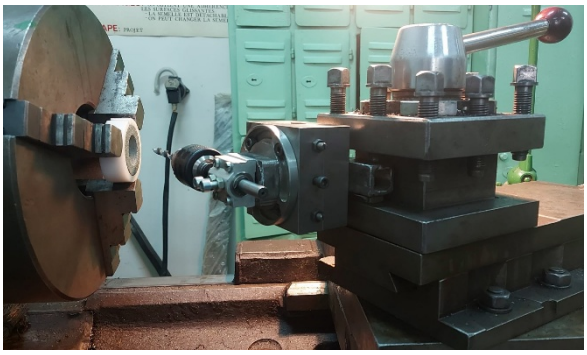

Fig. 8. Image of the proposed device version for sharpening twist drills.

6. CONCLUSIONS

The problem addressed in this article was that of designing and manufacturing a twist drill sharpening device that can be adapted to a universal lathe and that allows the proper positioning of the drill bit, by using some principles specific to reverse engineering. From the literature on the sharpening of twist drills, it has resulted that the geometry of the drill bit and the sharpening method directly influence the performance of using the tool in the cutting processes, being likely to affect the machining accuracy, the size of the force and the working torque, the temperature and the wear of the tool. It was also found that the resulting flank area can exert a significant influence on the energy efficiency of the drilling process using twist drills.

The reverse engineering method is known to be effective for analyzing, optimizing, and redesigning various parts or equipment. The method has come to be used in several fields for innovation, for adapting known solutions to the requirements of new situations, and for reducing costs. In this research, the principles of the reverse engineering method were used to collect information through the analysis of existing drill sharpening solutions, for the design and manufacture of an adaptable drill sharpening device on a universal lathe, usually existing in small machine shops. As such, a prototype of the twist drill sharpener was designed and produced, which provides conditions for making adjustments so that it becomes possible to obtain an appropriate geometry of the two flank surfaces of a twist drill.

The research carried out can be continued through extensive experimental testing of the prototype, first of all, to identify values of the adjustment parameters that would ensure the obtaining of suitable flank surfaces of the drill teeth, but also to compare the results to be achieved with the results obtained by other researchers in this direction.

REFERENCES

[1] A. Simoncelli, L. Buglioni, G. Abate, P. Gayol, A.J. Sánchez Egea, D. Martínez Krahmer, *Effects of drill point geometry on cutting forces and torque when drilling AA1050,* Sustainable Manufacturing as a Driver for Growth GCSM 2023, Springer, Cham, 2025, available at: https://doi.org/10.1007/978-3-031-77429-4_74, accesed 2025-04-27.

[2] Z. Demir, *An experimental investigation of the effects of point angle on the high-speed steel drills performance in drilling,* Measurement and Control, Vol. 51, Issue 9-10, 2018, pp. 417-430, available at: journals.sagepub.com/doi/10.1177/0020294018797853, accessed at 2025-04-27.

[3] V. Belousov, *Studiul și elaborarea metodei de ascuțire cilindro-eliptice a burghielor elicoidale*. Teză de doctorat, Institutul Politehnic Iași, 1966.

[4] N. Oancea, V. Teodor, N. Dumitrașcu, C. Fetecău, *Multi-flute helical drill with elliptical cutting edges*, Buletinul Institutului Politehnic Iași, 2000, available at: https://www.academia.edu/48526532/Multi_Flute_Helical_Drill_with_Eliptical_Cutting_Edges, accessed at 2025-04-27.

[5] N. Oancea, V.G. Teodor, C. Fetecău, G.R. Frumușanu, *Procedeu si dispozitiv pentru ascuțirea cilindro-toroidală a burghielor elicoidale multităiș cu muchii de așchiere în arc de cerc,* Brevet România, nr. 126382, 2015.

[6] N. Oancea, C. Fetecău, V. Teodor, N. Dumitrașcu, V. Marinescu, *Procedeu și dispozitiv pentru ascuțirea conică a burghielor multităiș cu muchie de așchiere în arc de cerc*, Brevet România, nr. 125838, 2011.

[7] V.G. Teodor, N. Baroiu, C. Fetecău, S. Berbinschi, N. Oancea, *Procedeu pentru ascuțirea hiperboloidală a burghielor multităiș cu muchie de așchiere în arc de cerc*, Brevet România, nr. 127177, 2017

[8] V. Teodor, C. Fetecău, N. Oancea, N. Dumitrașcu, V. Marinescu, *Procedeu și dispozitiv pentru ascuțirea cilindrică a burghielor multităiș cu muchie de așchiere în arc de elipsă,* Brevet România, nr. 125839, 2011.

[9] N. Baroiu, V.G. Teodor, S. Berbinschi, F. Susac, N. Oancea, *New sharpening method and the behaviour of the multi-flute twist drill with curved cutting edge in machining operations*, Indian Journal of Engineering and Materials Sciences, Vol. 23, 2016, pp. 357-369.

[10] V. Raja, K. J. Fernandes, *Reverse Engineering: An Industrial Perspective*, Springer Series in Advanced Manufacturing, 2008

[11] C. Croitoru, *Scule pentru mecanica fină. Scule de largă utilizare,* Universitatea Tehnică „Gh. Asachi”, Facultatea de Construcții de Mașini, Iași, 2000.

[12] N. Căpățînă, *Curs Scule Așchietoare. I*, Universitatea “Dunărea de Jos”, Galați, 2008, available at: https://www.ing.ugal.ro/Resurse/MENUS/Facultate/IFR/Scule_aschietoare.pdf?, accessed: 2025-03-15.

[13] J. Traugott, *Reverse engineered Tesla Model 3 shocked Porsche and Audi*, 2019, available at: https://carbuzz.com/news/reverse-engineered-tesla-model-3-shocked-porsche-and-audi/, accessed: 2025-03-15.

[14] F. Lambert, *Tesla Model 3 cost surprised Porsche and Audi after reverse-engineering*, 2019, available at: https://electrek.co/2019/02/09/tesla-model-3-cost-surprise-porsche-audi-reverse-engineering/ , accessed: 2025-03-16.

[15] *Stuxnet analysis by Langner*, 2025, available at https://www.langner.com/stuxnet/, accessed: 2025-03-16.

[16] *What is Stuxnet*? 2024, available at: https://verveindustrial.com/resources/blog/what-is-stuxnet/, accessed: 2025-03-16.

[17] Y. Zoria, *UK tank museum helped reverse-engineer Soviet-era parts for firm supplying materiel to Ukraine*, 2024, available at: https://euromaidanpress.com/2024/03/07/uk-tank-museum-helped-reverse-engineer-soviet-era-part-for-firm-supplying-materiel-to-ukraine, accessed: 2025-03-16.